7- CYLINDERS RADIAL ENGINE
150cc 4-STROKE GASOLINE/MIXTURE

Instructions and Maintenance Manual

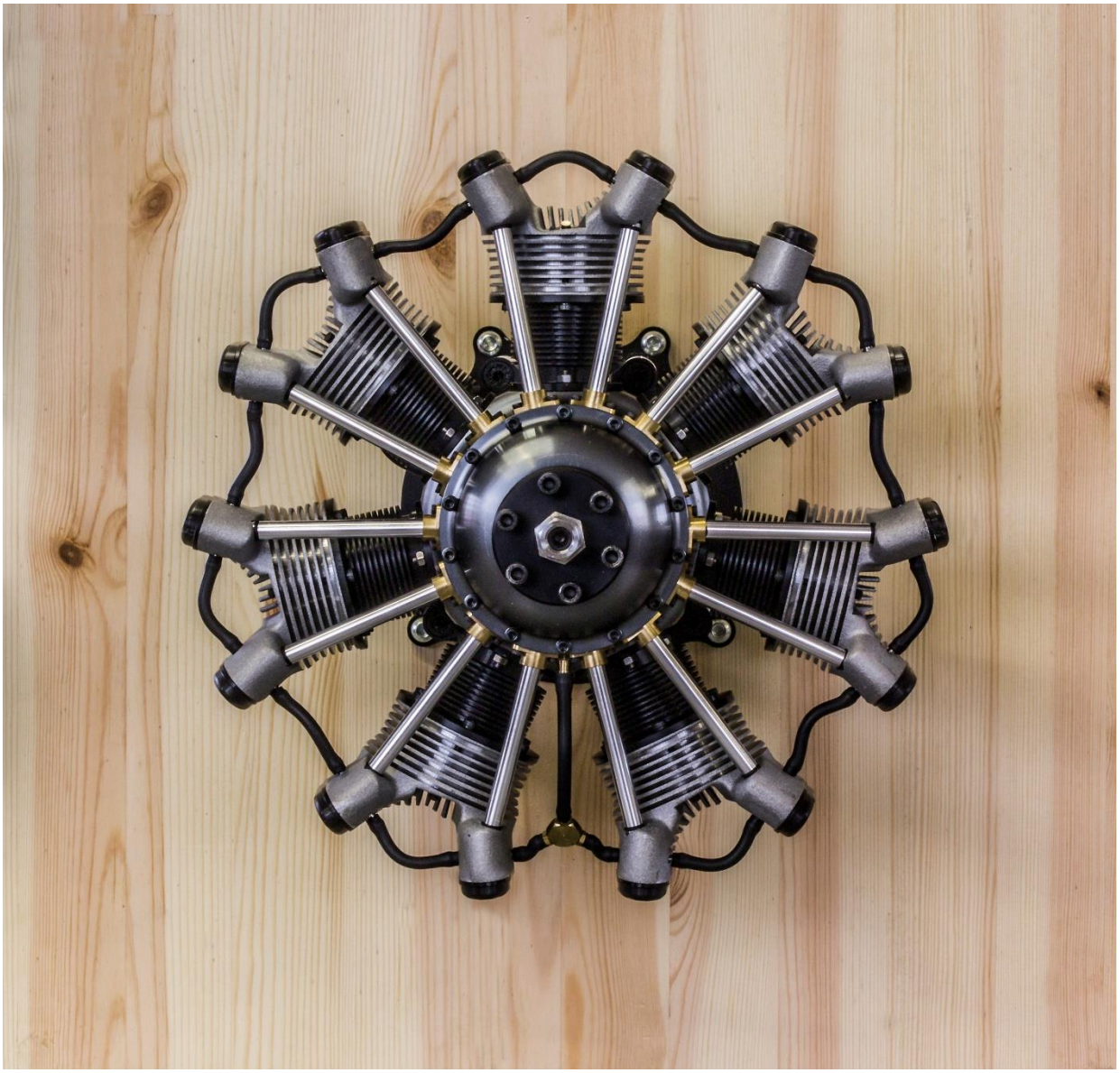

- Made with high-level technology
- Dynamically balanced to reduce torsional vibration and produce higher torque.
- Optional electric starter
- Optional Programmable ignition kit
- Optional Oil pump version (No Lubrication in fuel!)

Introduction

Congratulations on purchasing our engine, a top quality product made with attention to detail, with regard to the choice of materials and engineering technology.
The engine is the result of over 20 years of research and prototyping. Although new, it is the envy of other radial engines on the market.
The distribution system is innovative and is designed specifically to reduce the vibrations at high revolutions. Every detail of the engine is made from materials with exceptional mechanical properties to withstand stress, reduced weight, and ensure optimal reliability even in the hardest conditions. Only the cylinder heads are cast, all other parts derived entirely from solid billet then machined with CNC equipment to ensure precision, accuracy and stability.
Our engines use spark plugs 1 / 4x32 type ME-8 NJK and a non-programmable ignition system, all with PCI control.
If the engine is equipped with a programmable ignition system with cable connection, you will find specific instructions, which describe the software and the program that manages the advance and timing delay supplied with the unit.

The following table lists the technical data of our engine:

Piston Diameter	28 mm
Piston Stroke	35 mm
1 cylinder displacement	21,55 cc
Total cylinder displacement	150,88 cc
Number of cylinders	7
Direction of engine rotation	CCW
Direction of the drum cam distribution rotation	CW
Compression ratio	13.5 : 1
Minimum revolutions	500 / 650 rpm
Max revolutions	5000 rpm
Traction static force at constant torque	24 kg
Weight without electric start	5,8 kg
Weight with electric starter	6,2 kg
Max Power	14,5 HP
Spark plug type	ME-8 NGK 1/4X32
Diameter space	294,18 mm
Distance from propeller hub plan to the support firewall plan:	227,13 mm
Control unit supply	7.4 Volt minimum 3.000mA
for the flight is recommended	5.000 mA
Starting motor supply	24-32 Volt. 2.000 mA
Recommended Propeller Range (2 blade)	32x10 30x12 30x10 30x12 30x14 28x12 28x14

Operation

The engine is available running on gasoline only or with a mix of gasoline and 2% oil.
See the table below:

ENGINE	GASOLINE	MIXTURE
FUEL Lubrication	Gasoline 98/100 octane	Gasoline 98/100 octane e 2% oil Motul
Pumped LUBRICATION (kit gear pump)	Gasoline 98/100 octane	No lubrication in fuel
The pump kit is supplied separately		

Attention: Always use high quality synthetic/mineral oil, specific for 4-stroke engine.

This engine will give you a lot of satisfaction for many hours, if you strictly follow the instructions below.

Mounting on bench, assembly & safety operation.

Our engines have already been run tested for 30 minutes at Air.En Srl.

Engine running

The engine needs to be run for a further 2 hours, to bed in all the mechanical parts. Running is best performed on a test bench or stand, (see the image below). This can be built by the customer or purchased directly from our company. Four hours run time is required to fully run in the engine, the final two hours may be performed in an aircraft model if desired.

N.B. The securing plate engine should have a central hole with a diameter of 104 mm, to allow the passage of power cables, connectors, ignition leads, fuel lines, throttle linkages and the intake air.
Tappet clearance needs to be checked after every hours running, IE 4 times during break in period.
It is highly recommended to use a mixture of 2.5% to 3% oil during run in to make the run in optimal.

ENGINE BREAK IN / RUN STAND

1. Secure the engine mount with the supplied screws, making sure that there are no failures.
2. Connect the tank to the carburetor using a suitable fuel line and possibly an electric pump for further fuel supply.
3. Unscrew the 6 screws of the flange / propeller hub and mount the propeller, the propeller must be of the type and size recommended and must be balanced.

Air.en. Ltd. is not liable for damage to internal engine components due to unbalanced propellers being used.

4. Secure the propeller with the plate and 6 screws, nut and locking nut, making sure it is fitted tightly to the crankshaft.
5. Mount the rods / control cables for the choke and the butterfly on the Gas Walbro carburetor. It is recommended to use throttle movement friction and zero return spring. The minimum L and the maximum H are made with a flat bladed screwdriver (not included in accessories).

Carburetor with high and low fuel adjustment

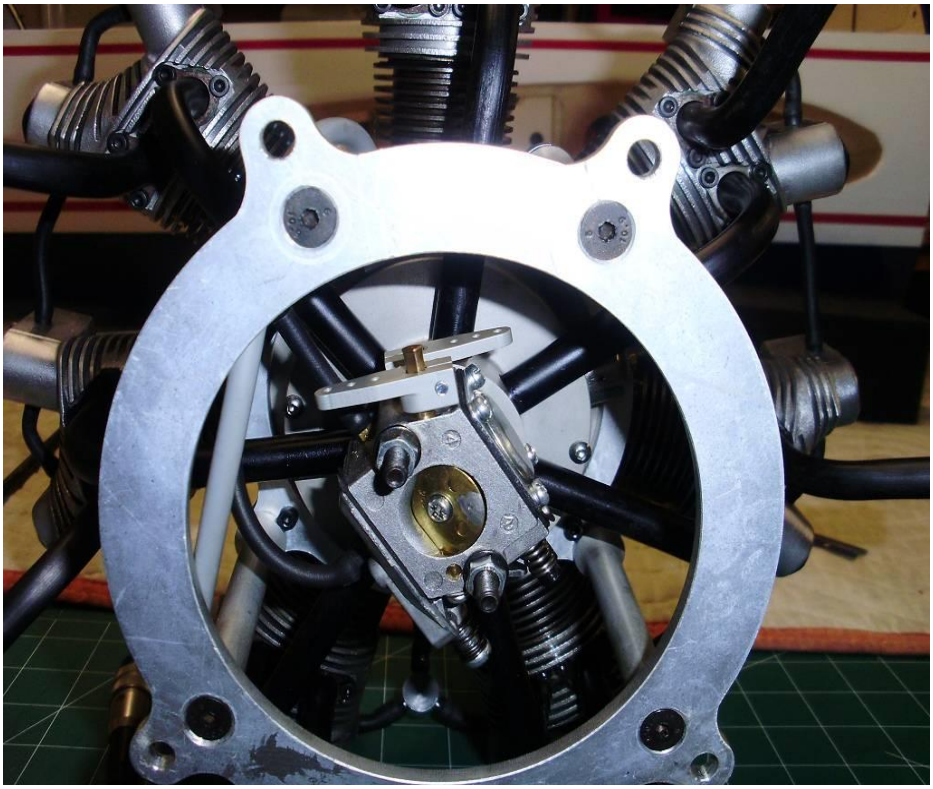

6. Each spark plug is connected with a cable from the ECU. The cables of the control unit are numbered and must be connected corresponding to each number stamped on each head in a counterclockwise direction and made to pass through the hole of the flange mounting plate. Example: cable number 1 on head, (Nº 1) printed on the back near the exhaust and intake ports on the back plate.

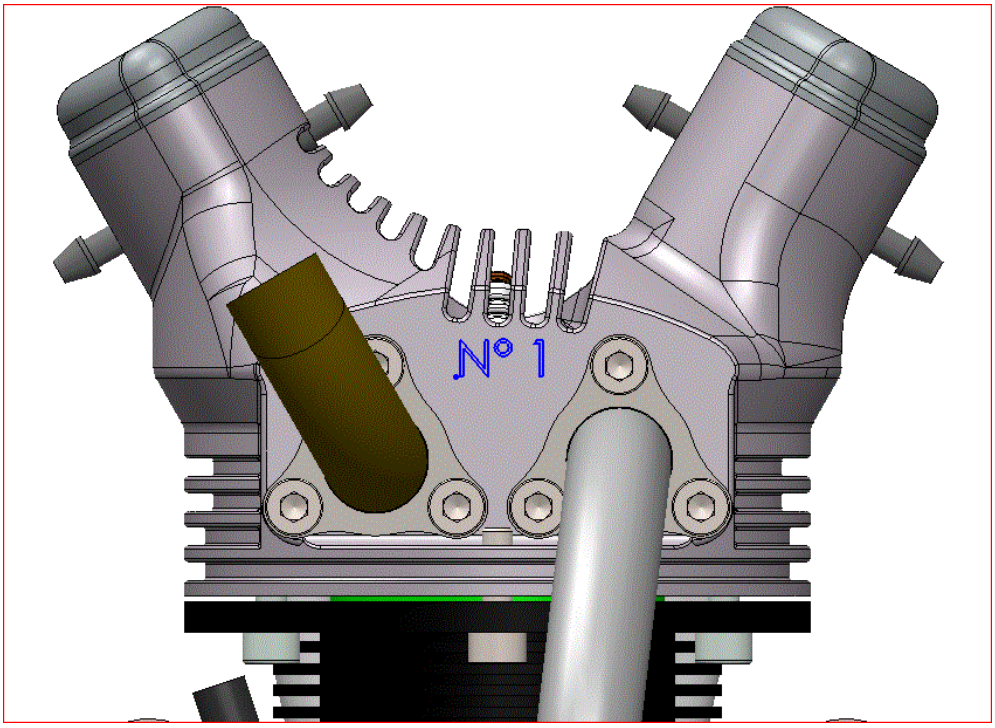

7. Mount the ECU on a soft sponge support behind the engine mounting plate, so it is not subject to vibration when the engine is running.
8. Connect the power, following the instructions provided with the control unit and perform tests using the specific control instrument included in the electric starter kit.
9. Provide a safety switch on the bench for the control unit.
The magnets disk is already set at the factory with an advance of 28/30 degrees,
You can adjust the disk, as you prefer, with a special hex wrench
10. Secure the fuel tank and make the necessary connections with suitable line for petrol.

Fill the fuel tank and close the choke. Open the throttle and perform some choking revolutions, (2 or 4) turns, so that the fuel reaches to the intake manifolds. After that, turn on the ignition and start the engine by hand with decisive swipes of the propeller.

(Caution)
Hand starting is a dangerous operation because there are moving parts that can cause damage to your hand or body.

(Optional lubrication kit)
If the engine uses the pumped Lubrication Option, the gear pump must be fitted as shown in the diagram supplied with the kit.

(Optional Starter Kit)
If the engine is equipped with an electric starter you must still turn the engine over by hand several times so that any oil left in the cylinders flows to the central casing.

If you have the electric starter kit, then press START to start the ENGINE. When the engine is running, turn off the starter with the OFF button. The control unit needs a Li-po battery of 7.4 Volt, minimum 3.000 mA. For the flight is recommended 5.000 mA.

The engine must idle until it reaches operating temperature.

MAINTENANCE

The carburetor is adjusted at the factory during testing, but you may need to recalibrate the Low and High speed mixture needles since the density of the air can vary depending on climate and or altitude. It is recommended you verify the carburetor is correctly adjusted.
You adjust the carburetor High and Low fuel mixture using the H & L screws on the Walbro carburetor, as detailed in the carburetor manual.
.

To carry out adjustment to valve clearance, we must remove the rocker and manually check that the gap is 0.05 mm for the exhaust valve and 0.08 mm the intake valve. This inspection should be done every 10 hours of operation. Adjust clearance only if the gap is excessive.

If the engine is not run for a long time, put some high quality synthetic motor oil in the crankcase, then slowly rotate the propeller counterclockwise to distribute the lubricant to all components.

WARRANTY CONDITIONS

The engine warranty is valid for 24 months from the date of testing. This warranty covers manufacturing defects and / or mechanical problems caused by defective assembly.

The warranty is voided in the following cases:

- If the engine is tampered with or disassemble by unskilled persons or those not authorized by the Air.En. Srl Company.
- If the mounted propeller does not meet the Air.en specifications or if not balanced.
- If the engine is not appropriately mounted to the test bench or model aircraft.
- If the engine is damaged due to being accidentally dropped, impacted by the ground or other objects.
- Use outside of modeling, (this engine is specifically designed for model applications only). Any applications outside of that use will void the warranty.